VACTROL VCF REV 3 WIRING SUGGESTION

11-4-18

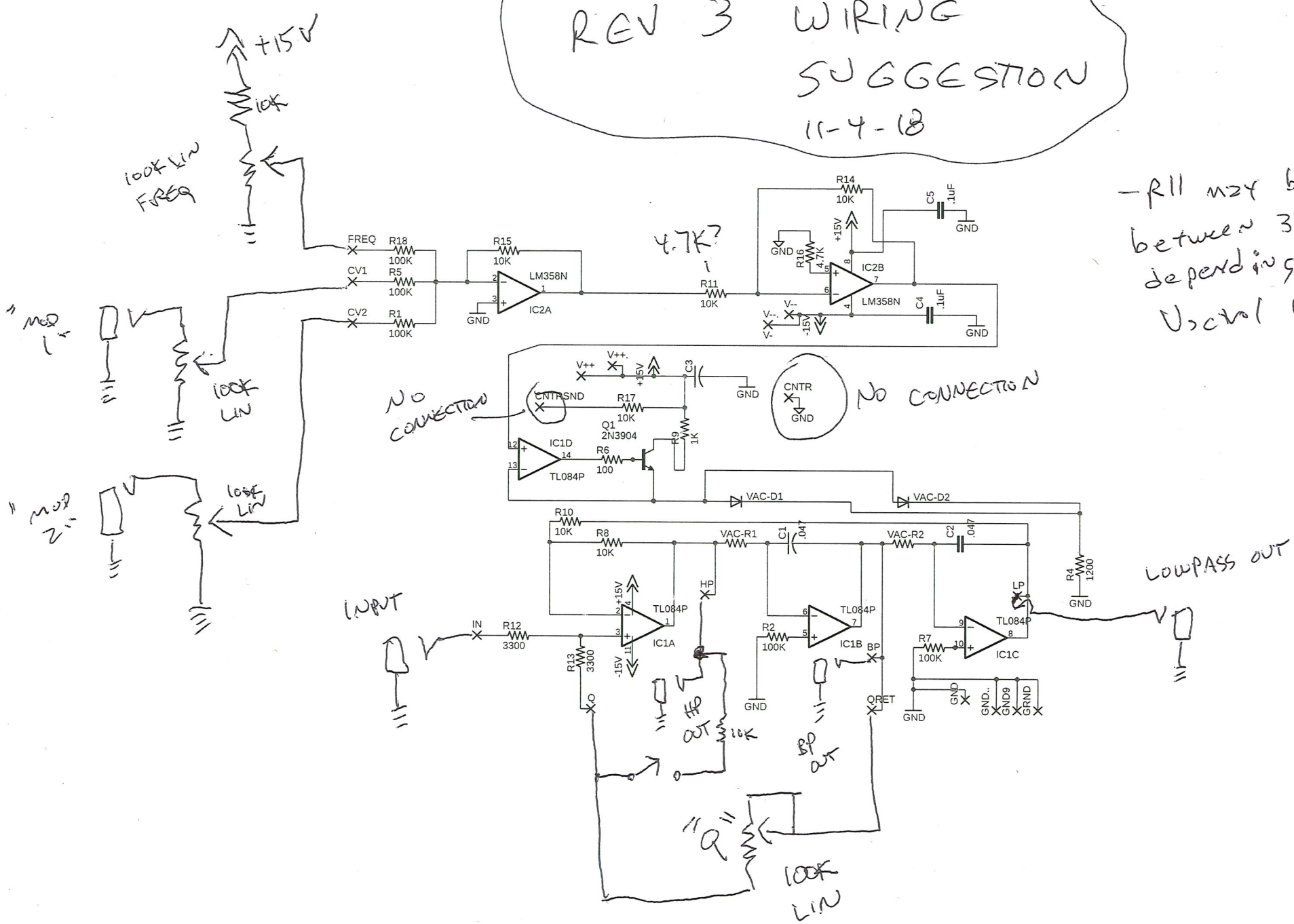

- R11 may be between 3K & 12K depending on Vactrol Used