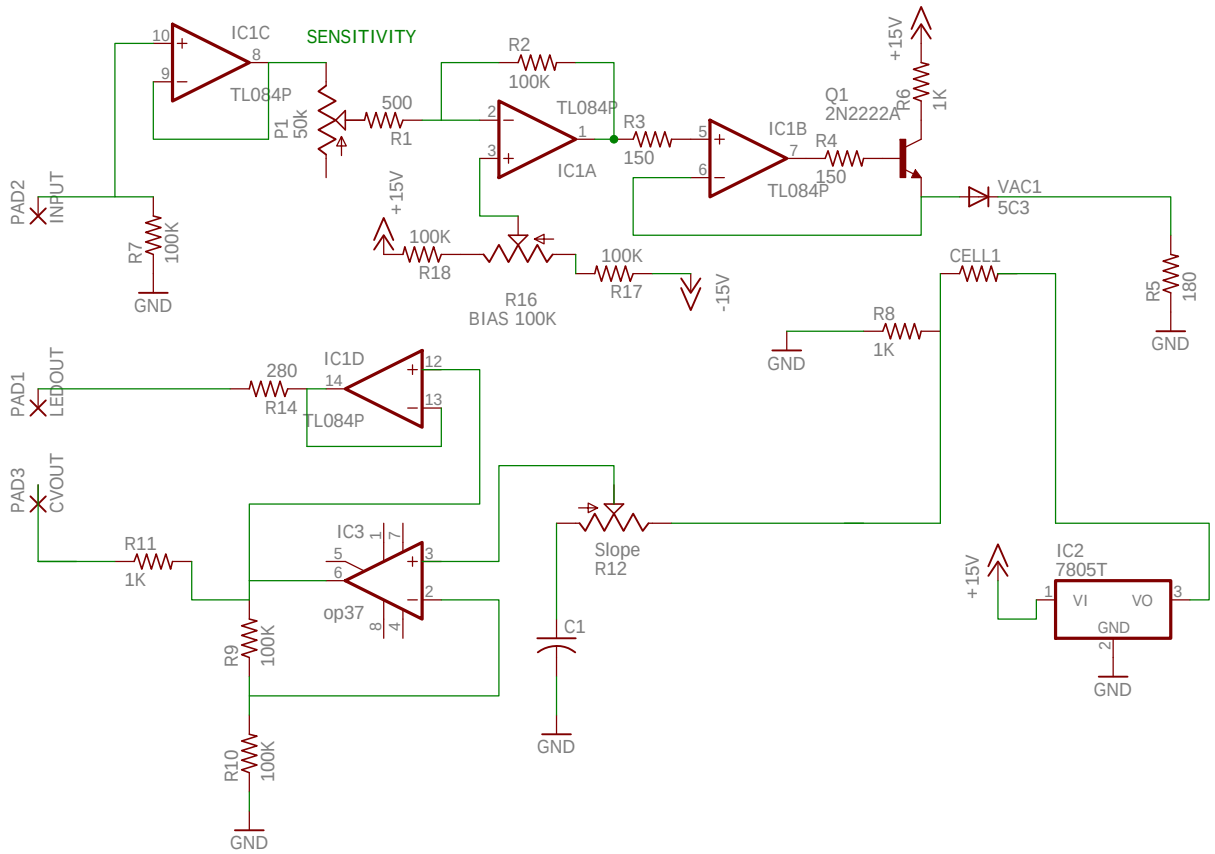
IC1C
TL084P
SENSITIVITY
P1
50k
500
R1
R2
100K
TL084P
IC1A
R3
150
IC1B
TL084P
R4
150
Q1
2N2222A
R6
1K
+15V
VAC1
5C3
R5
180
GND
CELL1
R8
1K
PAD2
INPUT
R7
100K
+15V
100K
R18
R16
BIAS 100K
100K
R17
-15V
PAD1
LEDOUT
280
R14
IC1D
TL084P
PAD3
CVOUT
R11
1K
IC3
op37
R9
100K
R10
100K
Slope
R12
C1
IC2
7805T
VI
VO
GND