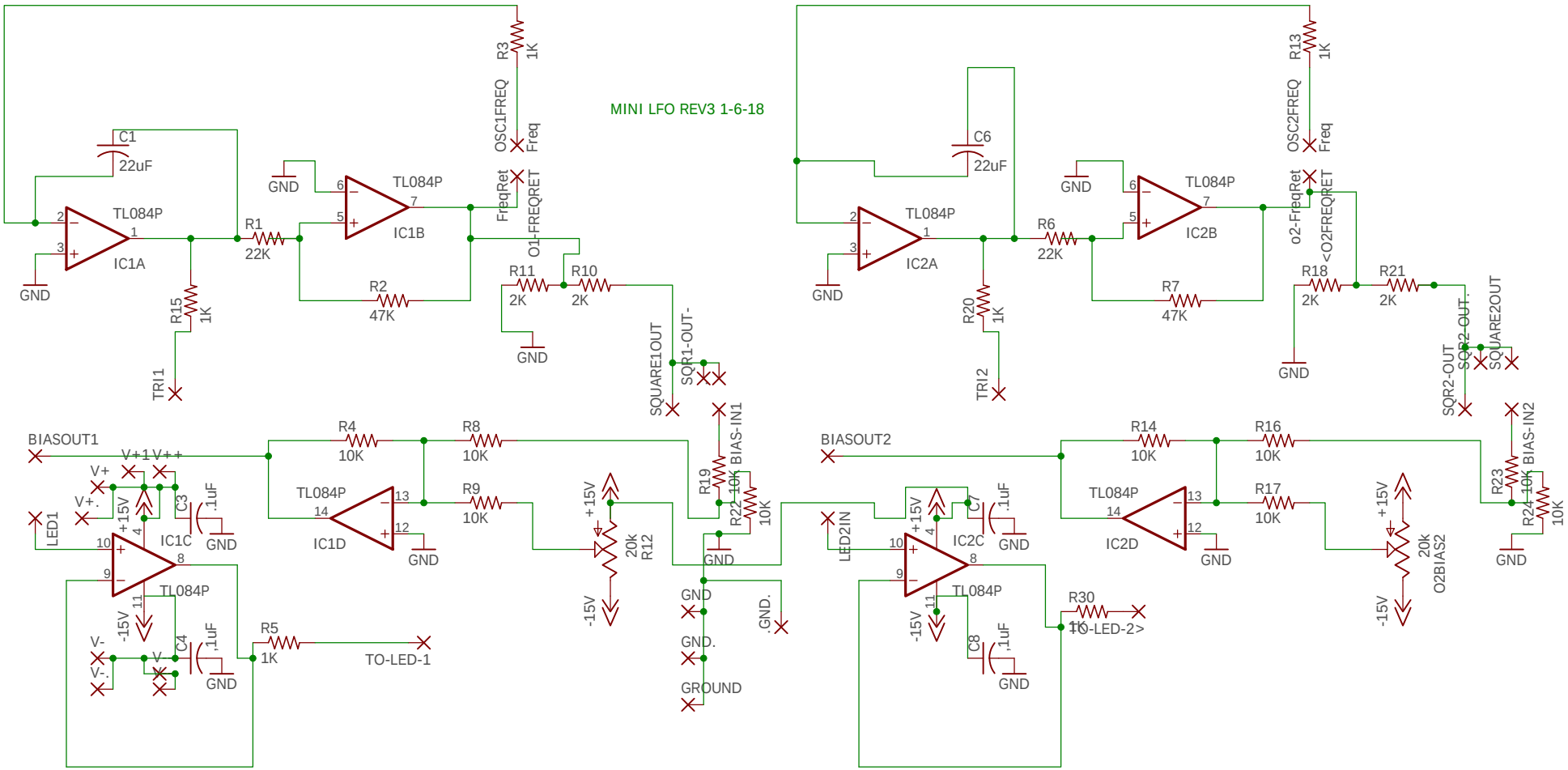
MINI LFO REV3 1-6-18
C1
22uF
TL084P
IC1A
GND
R15
1K
TRI1
R1
22K
GND
TL084P
IC1B
R2
47K
R3
1K
OSC1FREQ
Freq
FreqRet
O1-FREQRET
R11
2K
R10
2K
GND
SQUARE1OUT
SQR1-OUT-
C6
22uF
TL084P
IC2A
GND
R20
1K
TRI2
R6
22K
GND
TL084P
IC2B
R7
47K
R13
1K
OSC2FREQ
Freq
o2-FreqRet
<O2FREQRET
R18
2K
R21
2K
GND
SQR2-OUT
SQR2-OUT..
SQUARE2OUT
BIASOUT1
V+1 V++
V+
V+.
LED1
+15V
C3
.1uF
IC1C
GND
TL084P
-15V
V-
V-.
C4
.1uF
GND
R4
10K
R8
10K
TL084P
IC1D
R9
10K
GND
+15V
20k
R12
-15V
R19
BIAS-IN1
R22 10K
10K
GND
GND
GND.
GROUND
.GND.
BIASOUT2
LED2IN
+15V
C7
.1uF
IC2C
GND
TL084P
-15V
C8
.1uF
GND
R14
10K
R16
10K
TL084P
IC2D
R17
10K
GND
+15V
20k
O2BIAS2
-15V
R23
BIAS-IN2
R24 10K
10K
GND
R5
1K
TO-LED-1
R30
1K
TO-LED-2>