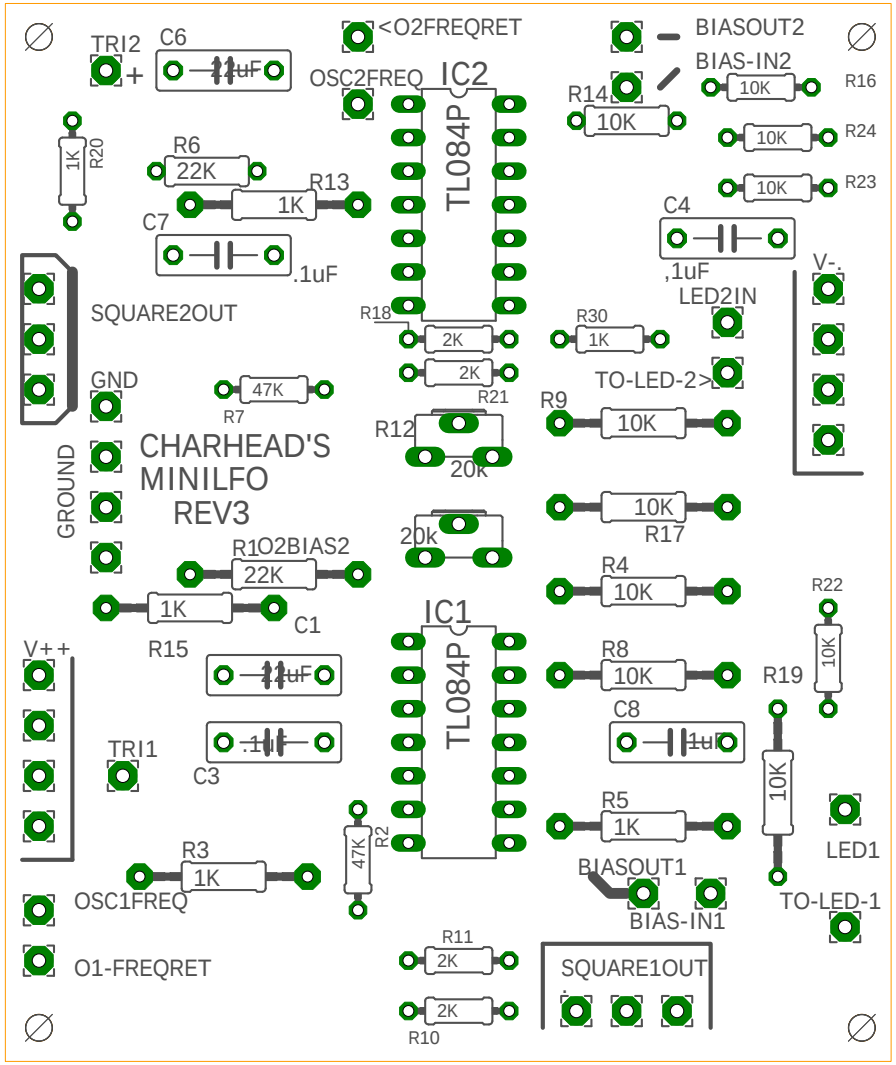
TRI2
C6
1uF
<O2FREQRET
OSC2FREQ
IC2
TL084P
BIASOUT2
BIAS-IN2
R14
10K
R16
10K
R24
10K
R23
1K
R20
R6
22K
R13
1K
C7
.1uF
C4
,1uF
V-.
LED2IN
SQUARE2OUT
R18
2K
2K
R30
1K
TO-LED-2>
GND
47K
R7
R21
R9
10K
R12
20k
CHARHEAD'S
MINILFO
REV3
GROUND
10K
R17
20k
R1
O2BIAS2
22K
R4
10K
R22
10K
1K
C1
IC1
TL084P
V++
R15
1uF
R8
10K
R19
10K
C8
1uF
TRI1
.1uF
C3
R5
1K
LED1
47K
R2
R3
1K
BIASOUT1
OSC1FREQ
BIAS-IN1
TO-LED-1
R11
2K
O1-FREQRET
SQUARE1OUT
2K
R10